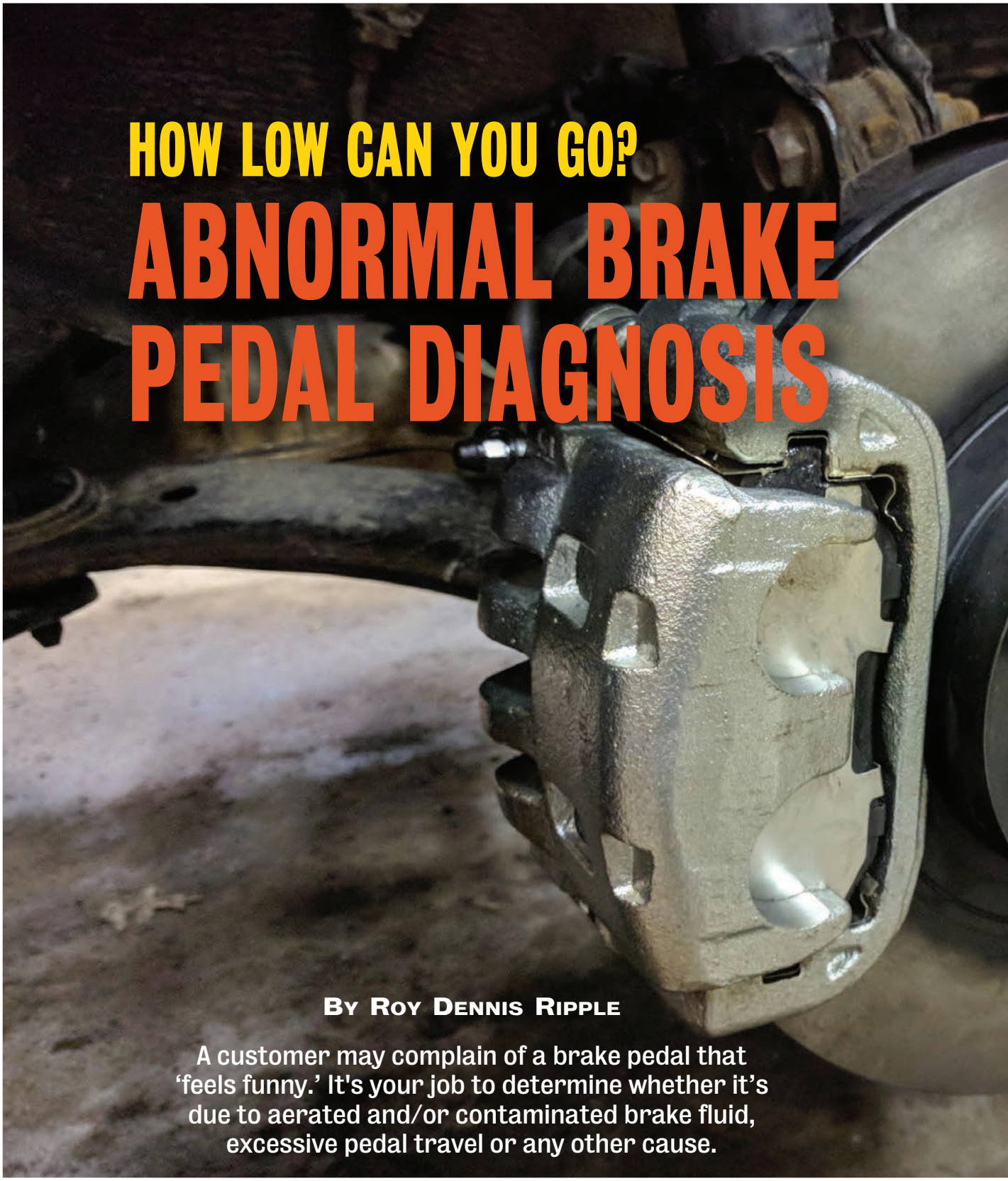

HOW LOW CAN YOU GO?

ABNORMAL BRAKE PEDAL DIAGNOSIS

By Roy Dennis Ripple

A customer may complain of a brake pedal that 'feels funny.' It's your job to determine whether it's due to aerated and/or contaminated brake fluid, excessive pedal travel or any other cause.

Photo: Karl Seyfert

Vehicles normally respond to our commands in a fairly predictable manner. When we push on the accelerator, we go forward; when we turn the steering wheel, we change direction; and when we press the brake pedal, we stop. Of all the things we ask of our vehicles, "please stop" is the most important request. The brake pedal should give the driver a reassuring feel that says, "I got this."

The brake pedal is the driver's physical connection to the brake system, providing feedback that the driver uses to determine if there's a problem with his brakes. Spongy, mushy and squishy are just a few of the terms that a customer might use to describe negative brake pedal feedback. Sometimes these concerns can be tricky to diagnose due to the numerous failures that can cause an unacceptable brake pedal feel.

The first step in diagnosing a low brake pedal concern is to determine the type of low brake pedal issue you're dealing with, and if other symptoms are present. It might be a good idea to forgo the road if you're uncomfortable with the function of the brakes and settle for a parking lot cruise instead.

Besides a low or mushy pedal, note if the brakes pull, squeak or pulsate. Does the pedal slowly drift to the floor when at a stop, or does it stop solid, but too close to the floor? Determine if one or more wheels are locking up, and note if the red or amber brake warning lamps are illuminated. All of this information will aid in your diagnosis.

A low brake pedal is always caused by either a hydraulic or a mechanical malfunction. When a mechanical malfunction is the cause, it's due to a component moving past the range of motion for which it was designed. A good example of this is out-of-adjust-

Photos & illustrations: Roy Dennis Ripple

This caliper has a gap between the inboard pad and the rotor due to the piston retreating into the bore. This will cause a low brake pedal on initial application.

ment rear brake shoes. The universally accepted specification for brake shoe-to-drum clearance is .015 in. Every thousandth of an inch over spec causes excess brake pedal travel. Less than .025 in. travel at the master cylinder pushrod can equal about ½ in. at the pedal. Every little bit of unnecessary movement adds up.

Another example is a caliper piston that retracts too far into the bore when disengaged. Rear calipers with integral parking brakes are notorious for this. This causes the piston to travel further than designed to initiate contact between the inboard pad and the rotor. This excess travel can translate into a heap of movement at the brake pedal.

Hydraulic concerns present the biggest challenge in low brake pedal diagnosis. The smallest amount of air trapped anywhere in the system will have a big effect on brake pedal feel. Brake fluid converts the energy applied to the pedal into the force required to engage the brakes. This happens because fluids are compressible only to a very small degree, so any pressure applied to a liquid is transferred to all portions of the liquid and to the walls of the container it occupies. Since air is very compressible, air creates a nice, soft cushion for the fluid to lean on, ruining any chance of achieving solid hydraulic pressure.

Use the information you acquired during the road test to guide your initial visual inspection. Watch all the calipers move while an assistant pumps the brake pedal. Worn caliper pins or incorrectly installed brake pads can cause the caliper to flex side to side. This lateral movement uses up brake pedal travel. Be cautious of brake pads that are location-specific, or that need to line up with a locating pin during installation. If these pads are incorrectly installed, they'll cause the caliper to flex.

While you're eyeballing the calipers, make sure they're on the correct side. When a caliper is installed on the wrong side, the bleeder valve will be below the inlet. Since air rises to the top, good luck bleeding that caliper. Check meticulously for an external leak. Brake fluid leaks don't always present themselves as drops that puddle in the driveway. Just a little seepage at a fitting can cause big trouble at the pedal. Don't forget to look behind the wheel cylinder boots while checking for leaks; there should be no fluid there.

During your visual inspection, also watch the rubber hoses as a helper pumps the brake pedal. Look for a bulge in the hose that appears under pressure, then disappears when the pedal is released. I've seen hoses twist while pressurized due to a defect at the union where the rubber hose meets the metal crimp. Excess hose movement causes excess pedal movement.

Most negative brake pedal feedback issues fall into one or more of the following categories:

•A pedal that stops hard at the bottom but has excess play at the top is usually the result of a master cylinder or pushrod issue.

•A pedal that's spongy or mushy can be caused by air intrusion, contaminated brake fluid or a mechanical component moving beyond its designed range of motion.

•A pedal that continues to move toward the floor when applied is caused by a loss of hydraulic pressure, which can be caused by an external leak or an internally leaking component. Contaminated brake fluid can also cause a brake pedal to drift downward.

An occasional exception to these rules—there's always an exception—is the antilock brake system (ABS) hydraulic control unit (HCU). A defective HCU will create symptoms that feel like air intrusion or a pressure loss and can really complicate your diagnosis.

Let's look at a brake pedal that stops hard at the bottom but has excess play at the top. A good way to determine if there's too much pushrod travel is to loosen the master cylinder-to-power booster attaching hardware. Have an assistant hold the loose master cylinder firmly against the booster while you slowly apply the brake pedal. Determine how far the pedal moves before your helper feels the push on the master cylinder. Excessive pushrod play could be caused by a weak or

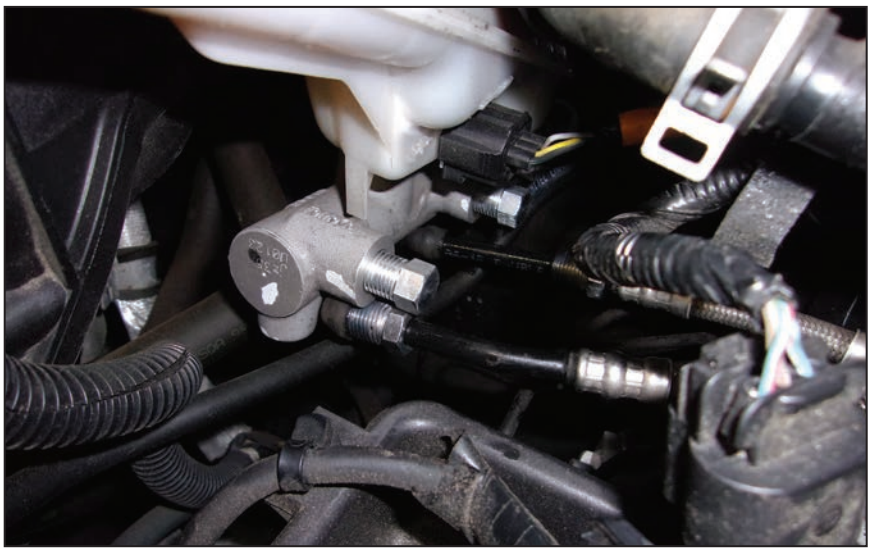

This photo shows both ports blocked off at the master cylinder. Blocking the ports will allow you to quickly isolate the master cylinder and determine whether it's healthy.

broken master cylinder bore spring that's not returning the piston all the way to the back of the bore, or it could be a pushrod or booster issue. Remember, a little play at the pushrod is a lot at the pedal.

Many automakers use an adjustable pushrod. This adjustment is set at the factory and shouldn't have to be messed with. If you need to adjust the pushrod, something's wrong.

We once serviced a Ford Escape with excessive brake pedal travel at the top. Loosening the master cylinder determined that we lost about 3 in. of pedal travel before the piston moved. We removed the master cylinder and discovered that the small dome-shaped piece that was pressed into the end of the pushrod, which fits into the master cylinder bore, was missing, and laying at the bottom of the booster. This added almost ¼ in. of travel to the pushrod.

Diagnosing a spongy, mushy brake pedal issue can sometimes be frustrating as well as time-consuming. Here's an example of how important the initial road test is when diagnosing a spongy brake pedal.

While we were road-testing a vehicle with a low, spongy brake pedal, we noticed that the brakes pulled to the left. That told us that the left front and right front calipers were not applying evenly. Using the results from the road test, we started our visual inspection at the front calipers. Both front wheels were spinning freely and both stopped spinning when the brakes were applied. There was no excessive movement in either caliper or hose during brake application, and the brake pads were a healthy 9mm, with nice, beefy rotors.

Since the road test suggested there was an issue with the front brakes, it only made sense to check the front calipers for air. We removed a nice pocket of air from the right front caliper, which temporarily fixed the pedal. I say "temporarily" because we found no reason for that caliper to be holding air, as there was no sign that it was recently disassembled. Caliper piston seals and wheel cylinder cup seals can replicate a one-way check valve. Fluid can't get out but air can get

RANSHU

RANSHU.COM

ACDelco®

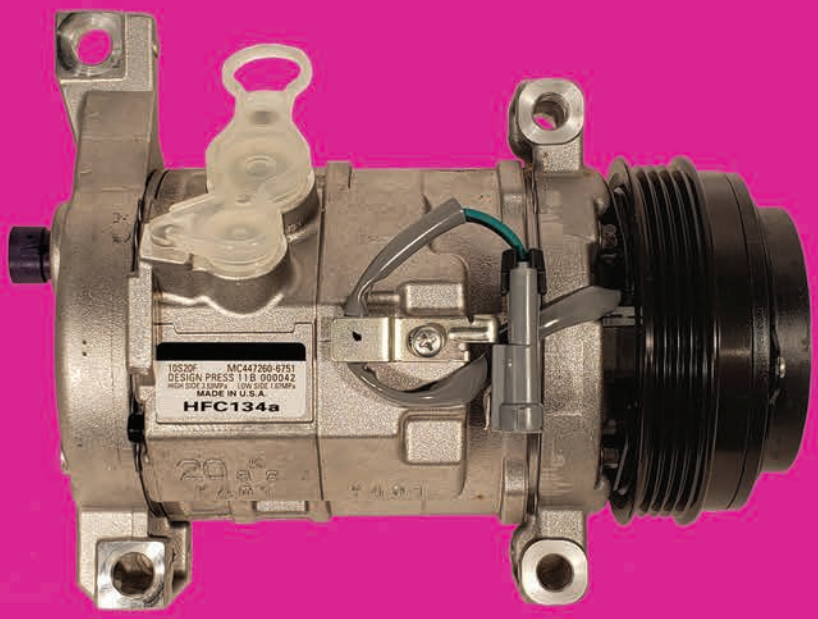

RANSHU IS FACTORY DIRE

ARE YOU LOOKING FOR COMPRESSORS THAT STAY ON THE CAR ONCE YOU INSTALL THEM?

Ford Motorcraft®

CT. CALL US, 800-628-0474

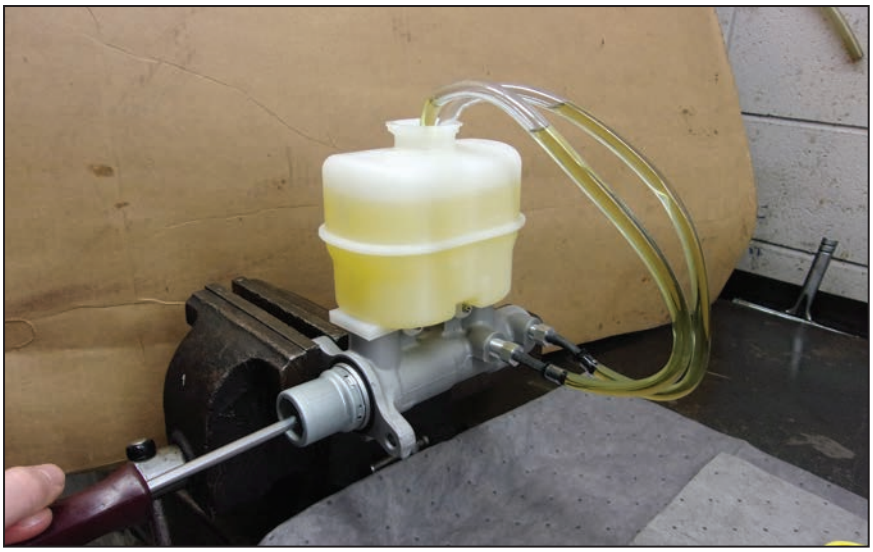

A master cylinder is being bench-bled in this photo. Notice the check valves located between the bleeder fittings and the clear hoses, placed there to keep air from backfeeding into the master cylinder as the piston is pumped.

in. So we replaced the caliper. This scenario reinforces the importance of gathering information during the road test. If we didn't feel the brake pull, we wouldn't have started our diagnosis at the front calipers.

Unfortunately, it's not always that simple. If you're faced with a low, mushy pedal and the visual inspection yields no clues, it's time to break out the blockers. Blocking off sections of the brake system (not individual components) is the surest way to find the cause of the problem. Thexton Manufacturing makes a master cylinder plug kit (Part No. 803P) that can also be used on HCUs. It's important to use quality plugs when blocking brake pressure. A small leak at a plug will yield erroneous results.

Always start by blocking the master cylinder ports. If the master cylinder is good, the pedal should be rock hard—barely moving—with the ports blocked. If the brake pedal moves at all, the master cylinder is leaking internally, there's a pushrod issue or the brake fluid is contaminated.

If the master cylinder is good, most diagnostic procedures recommend blocking the HCU ports next. The problem is that the HCU tends to be hard to access, and the fittings are usually tough to get a wrench on due to their proximity to each other. So in the spirit of streamlined diagnosis, it makes sense to check the easier-to-access components first, which would be the wheels.

Block each wheel individually at the steel line, before the rubber hose; this way, you're taking the hoses, calipers and wheel cylinders out of the equation. Do not block off the calipers by using vise grips to crimp the rubber hoses. Damaging a rubber brake hose could cause it to work like a one-way valve, allowing pressure to be applied to the caliper but not to bleed off, causing a perpetually applied brake caliper. The Thexton block-off kit contains only male fittings, and you need a female fitting to block the steel line. Attaching a brass union to the male plug works great. Test the pedal after blocking each wheel. We found a right rear caliper on a Ford Explorer that was causing a low, spongy pedal using this method. We never did identify the actual cause of the caliper malfunction. It wasn't leaking, the pins were sturdy, no air, all looked fine. But the pedal came right up when we blocked it off. We replaced it; problem fixed.

If you find no problem at the wheels, you'll need to access the HCU. It's best to block all the outlet ports on the HCU at the same time. This is a lot of work just for a diag-

Brake Fluid	Dry Boiling Point	Wet Boiling Point
DOT 3	401°F (205°C)	284°F (140°C)
DOT 4	446°F (230°C)	311°F (155°C)
DOT 5	500°F (260°C)	356°F (180°C)
DOT 5.1	518°F (270°C)	374°F (190°C)

	DOT 3	DOT 4	DOT 5	DOT 5.1
DOT 3	●	●	●	●
DOT 4	●	●	●	●
DOT 5	●	●	●	●
DOT 5.1	●	●	●	●

● Totally Compatible
● Not Compatible Do Not Mix

These charts show the compatibility and wet and dry boiling points of DOT 3, DOT 4, DOT 5 and DOT 5.1 brake fluids. Notice the difference in boiling points between wet and dry brake fluids that absorbing only 3.7% of water (the definition of "wet" for brake fluid) makes.

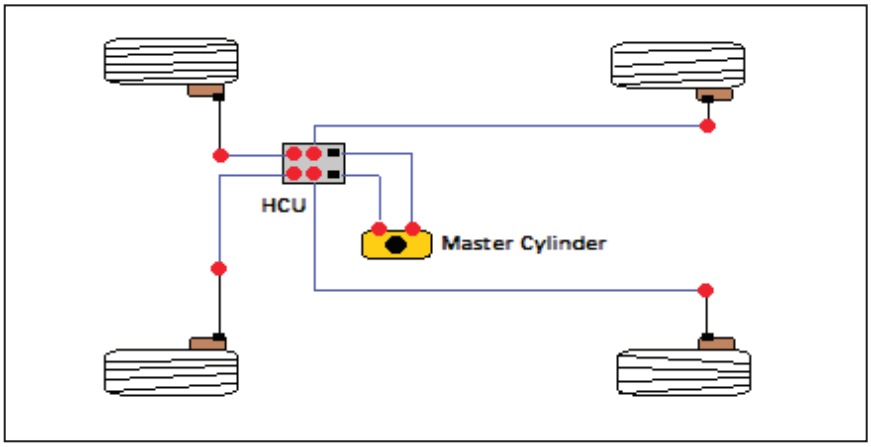

The red dots in this illustration indicate the location points that should be blocked off during brake pedal diagnosis. Start at the master cylinder, then move outward.

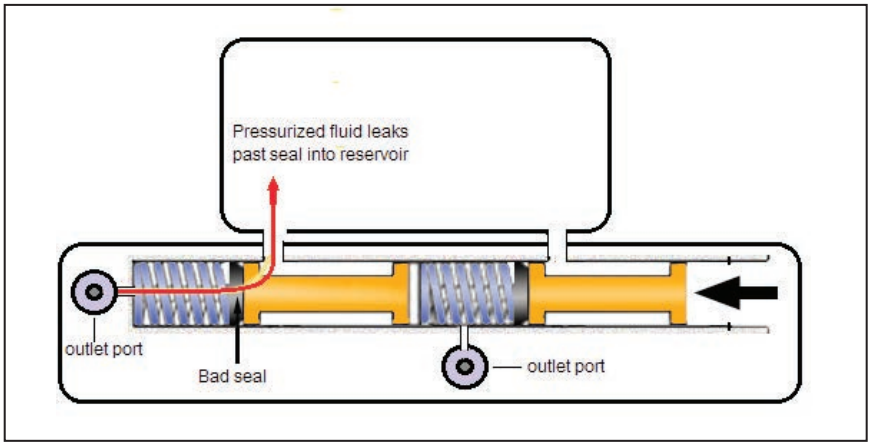

This illustration demonstrates how pressurized fluid can bypass a faulty piston seal in a master cylinder. No visible fluid leaks would be produced in this case.

nosis, but at this point there's very little choice.

If the pedal is still low with all the HCU outlet ports blocked, before passing sentence on the HCU, perform a service bleed. HCUs seem to be a favorite resting place for stowaway air. Even if you have no reason to believe that the brake system was opened to atmosphere, you should bleed the HCU before condemning it.

ABS service bleed procedures are performed with a scan tool and vary by manufacturer. Some procedures are as easy as pressing the brake pedal a few times and clicking a button on the scan tool; others will require you to open bleeder valves, which makes a real mess on the shop floor. Whatever the procedure, it's very important to bleed all the wheels after performing an ABS service bleed.

I started using a brake pressure bleeder a couple of years ago and I'll never go back to the old pedal-pumping method. Pressure bleeders work great. They attach to the master cylinder reservoir in place of the cap and put the brake system under consistent pressure. The biggest advantage of this—besides not needing an assistant—is that you can open a bleeder valve and just let it flow, pushing all of the air out of a line from the master cylinder to the wheel cylinder or caliper with just one turn of a bleeder valve. If you don't already have a pressure bleeder, I highly recommend getting one.

It's important to properly bench-bleed a new master cylinder before installation. It can be tough to bleed the air from a master cylinder once it's installed on the vehicle. Mount the master cylinder firmly in a vise and screw bleeder fittings into the outlet ports. Attach hoses to the fittings, with the other ends of the hoses in the reservoir, submerged in brake fluid. An effective kit for bench-bleeding a master cylinder comes with check valves, which allow the air to be pushed out while not allowing air to get sucked in on the back stroke. Thexton, Dorman, NAPA and others offer such kits.

If you don't have check valves for the hoses, the procedure will still work. Since the hoses are submerged in brake fluid, fluid from the reservoir rather than air will be pulled back into the master cylinder. The problem is that air that doesn't make it to the end of the hose gets sucked back into the cylinder on the back stroke. Check valves prevent this from happening.

With the hoses in place, slowly push the piston into the master cylinder, then allow the piston to return to the rest position. You'll see air bubbles exit the master cylinder through the clear hoses. Do not push the piston past its normal range of motion; doing so can damage the piston seals, rendering the master cylinder useless. When using check valves, all the air is gone within seven to ten strokes. Be sure that the fittings are tight, as a poor seal at a fitting will pull air into the master cylinder.

The heart of a hydraulic brake system is the fluid, and when that goes bad, so does the pedal. Most automotive applications use DOT 3, DOT 4 or DOT 5.1 fluid, all of which are glycol-ether-based. DOT 5 is silicone-based and should not

be mixed with glycol-based brake fluids. The most important property of brake fluid is that it maintains a stable viscosity and compressibility throughout its entire operating temperature range—very cold to very hot. The negative property of brake fluid is that it's hygroscopic, which means it absorbs water.

Water in brake fluid greatly lowers its boiling point. The dry boiling point of DOT 3 is 401°F. The wet boiling point, defined by the temperature at which the fluid boils after absorbing 3.7% water by volume, is 285°F. Big difference. Since brake fluid temperatures at the calipers can easily exceed 200°F, this could be a problem. The fact that water freezes also tends to complicate things a bit. This is why it's recommended that brake fluid be changed every two years.

When brake fluid is contaminated with water it turns a darker color. If the brake fluid looks contaminated, or if you're diagnosing a vehicle that's more than two years old, recommend a brake fluid flush. Use a pressure bleeder or brake fluid flush machine to push all the old fluid out through the bleeder valves. Be sure to check all the bleeder valves before selling the brake flush. If you think the valves are going to break off, you need to know this beforehand.

A couple of more things: A customer might describe an intermittent false ABS activation event as a low brake pedal. But if the pedal feels fine to you, check for DTCs in the ABS module. Also, contaminated fluid can damage an HCU. Brake fluid is designed to protect metal brake parts against corrosion, an attribute it loses when weakened by water. So when replacing an HCU, it's imperative to flush the fluid.

It seems that the furthest thing from anyone's mind as he's driving down the road is the brake system. The song on the radio or the setting of the climate control system occupy more brain space than the brakes do. So maybe problems like a low brake pedal and/or noisy brakes should be looked upon as an important safety warning. It's the brake system whispering, "Hey, remember me?" to the procrastinator who should plan on getting his brakes checked very soon. M

This article can be found online at *www.motormagazine.com.*